Work Order ID 70177

Monday, May 30, 2011 2:40:24 PM

Item ID: D3391-021 **Accept** **Setup** **Start**

Revision ID: **Stop**

Item Name: Fwd Tube Assembly

Start Date: 5/31/2011 **Start Qty:** 1.00 **Cust Item ID:**

Required Date: 6/10/2011 **Req'd Qty:** 1.00 **Customer:**

Reference:

Approvals: **Process Plan:** MF **Date:** 11-05-30 **Tooling:** _____ **Date:** _____ **Run** **Start**

QC: _____ **Date:** _____ **SPC (Y/N):** _____ **Date:** _____ **Stop**

Sequence ID/ Work Center ID	Operation Description	Set Up/ Run Hours	Tool ID	Tool #	Plan Code	Accept Qty	Reject Qty	Reject Number	Insp. Stamp
Draw Nbr	**Revision Nbr**								
D3391	Rev H								
100	Skidtubes	0.00				1			BB 11/06/01
Skidtubes	**Memo**	0.00							
Skidtubes	Cut extrusion to 46.52 +0.010 -0.020								
110	BENDING MACHINE - SKIDTUBES	0.00							DP 11-6-2
CNC Bend 1	**Memo**	0.00							
CNC Delta 100 Bender	Bend as per Dwg D3391 Using Bend Prog 3391021								
120	QC5- Inspect part completeness to step on W/O	0.00				1	0		BB 11/06/01
QC	**Memo**	0.00							
Quality Control									

Dart Aerospace Ltd

W/O:		WORK ORDER CHANGES					
DATE	STEP	PROCEDURE CHANGE	By	Date	Qty	Approval Chief Eng / Prod Mgr	Approval QC Inspector

Part No: _____ PAR #: _____ Fault Category: _____ NCR: Yes No DQA: _____ Date: _____

Resolution: _____ Disposition: _____ QA: N/C Closed: _____ Date: _____

NCR:		WORK ORDER NON-CONFORMANCE (NCR)						
DATE	STEP	Description of NC Section A	Corrective Action Section B			Verification Section C	Approval Chief Eng	Approval QC Inspector
			Initial Chief Eng	Action Description Chief Eng	Sign & Date			

NOTE: Date & initial all entries

H:\fFORMS\Quality Assurance\approved QA\NCRWO RevE

Work Order ID 70177

Monday, May 30, 2011 2:40:24 PM

Item ID: D3391-021 **Accept** **Setup Start** **Stop**

Revision ID:

Item Name: Fwd Tube Assembly

Start Date: 5/31/2011 **Start Qty:** 1.00 **Cust Item ID:**

Required Date: 6/10/2011 **Req'd Qty:** 1.00 **Customer:**

Reference:

Approvals: **Process Plan:** _____ **Date:** _____ **Tooling:** _____ **Date:** _____ **Run Start** **Stop**

QC: _____ **Date:** _____ **SPC (Y/N):** _____ **Date:** _____

Sequence ID/ Work Center ID	Operation Description	Set Up/ Run Hours	Tool ID	Tool #	Plan Code	Accept Qty	Reject Qty	Reject Number	Insp. Stamp
130	HAAS CNC VERTICAL MACHINING #1	0.00							
HAAS 1	**Memo**	0.00				1	0		
HAAS CNC vertical machine #1	1-Machine as per Folio FA590 Rev. A A & Dwg D3391 Rev. H Identify as D3391-1 2-Deburr		cmf 11/06/08						
140	QC2- Inspect parts off machine FAI/FAIB	0.00							
QC	**Memo**	0.00	cmf 11/06/08			1	0		
Quality Control									
150	CONVENTIONAL MILLING MACHINE	0.00							
Mill Conv	**Memo**	0.00				1	0		
Conventional Milling Machine	Drill X1 Aft cap as per Dwg D3391 .1875" dia		11/06/10						

Dart Aerospace Ltd

W/O:		WORK ORDER CHANGES					
DATE	STEP	PROCEDURE CHANGE	By	Date	Qty	Approval Chief Eng / Prod Mgr	Approval QC Inspector

Part No: _____ **PAR #:** _____ **Fault Category:** _____ **NCR:** Yes No **DQA:** _____ **Date:** _____

Resolution: _____ **Disposition:** _____ **QA: N/C Closed:** _____ **Date:** _____

NCR:		WORK ORDER NON-CONFORMANCE (NCR)						
DATE	STEP	Description of NC Section A	Corrective Action Section B			Verification Section C	Approval Chief Eng	Approval QC Inspector
			Initial Chief Eng	Action Description Chief Eng	Sign & Date			

NOTE: Date & initial all entries

H:\fFORMS\Quality Assurance\approved QA\NCRWO RevE

Work Order ID 70177

Monday, May 30, 2011 2:40:24 PM

Item ID: D3391-021 **Accept** **Setup** **Start**

Revision ID: **Stop**

Item Name: Fwd Tube Assembly

Start Date: 5/31/2011 **Start Qty:** 1.00 **Cust Item ID:**

Required Date: 6/10/2011 **Req'd Qty:** 1.00 **Customer:**

Reference:

Approvals: **Process Plan:** _____ **Date:** _____ **Tooling:** _____ **Date:** _____ **Run** **Start**

QC: _____ **Date:** _____ **SPC (Y/N):** _____ **Date:** _____ **Stop**

Sequence ID/ Work Center ID	Operation Description	Set Up/ Run Hours	Tool ID	Tool #	Plan Code	Accept Qty	Reject Qty	Reject Number	Insp. Stamp
160	QC2- Inspect parts off machine FAI/FAIB	0.00							
QC	**Memo**	0.00	AO 11/06/10			1			
Quality Control									
170	QC8- Inspect parts - second check	0.00	JL 11/06/13						
QC	**Memo**	0.00							
Quality Control									

Dart Aerospace Ltd

W/O:		WORK ORDER CHANGES					
DATE	STEP	PROCEDURE CHANGE	By	Date	Qty	Approval Chief Eng / Prod Mgr	Approval QC Inspector

Part No: _____ PAR #: _____ Fault Category: _____ NCR: Yes No DQA: _____ Date: _____

Resolution: _____ Disposition: _____ QA: N/C Closed: _____ Date: _____

NCR:		WORK ORDER NON-CONFORMANCE (NCR)						
DATE	STEP	Description of NC Section A	Corrective Action Section B			Verification Section C	Approval Chief Eng	Approval QC Inspector
			Initial Chief Eng	Action Description Chief Eng	Sign & Date			

NOTE: Date & initial all entries

H:\fFORMS\Quality Assurance\approved QA\NCRWO RevE

Work Order ID 70177

Monday, May 30, 2011 2:40:24 PM

Item ID: D3391-021 **Accept** **Setup Start** **Stop**

Revision ID:

Item Name: Fwd Tube Assembly

Start Date: 5/31/2011 **Start Qty:** 1.00 **Cust Item ID:**

Required Date: 6/10/2011 **Req'd Qty:** 1.00 **Customer:**

Reference:

Approvals: **Process Plan:** _____ **Date:** _____ **Tooling:** _____ **Date:** _____ **Run Start** **Stop**

QC: _____ **Date:** _____ **SPC (Y/N):** _____ **Date:** _____

Sequence ID/ Work Center ID	Operation Description	Set Up/ Run Hours	Tool ID	Tool #	Plan Code	Accept Qty	Reject Qty	Reject Number	Insp. Stamp
180		0.00							
Skidtubes	Skidtubes								
Skidtubes	**Memo**	0.00							

1-Drill float bag holes as per Dwg D3391 using DT8798(Do not open tow cap holes to finish size)
(ONLY DRILL HOLES MARKED "A")

2-Drill Remaining two holes for tow cap using DT 8819 Locating off of .1875" holes drilled in previous step

3-Open tow cap holes to .208" as per Dwg D3391

4-Open Tow Ring hole to .640" as per Dwg D3391

5- open float bag holes 0.328" and counter sink as per dwg D3391

6-Deburr & Scribe Batch number Inside aft end.

7-Transfer drill D3391-021 with D3391-023

DP 11-6-13

DP 11-6-14

190	QC5- Inspect part completeness to step on W/O	0.00							
QC	**Memo**	0.00							
Quality Control									

S Mooky

Dart Aerospace Ltd

W/O:		WORK ORDER CHANGES					
DATE	STEP	PROCEDURE CHANGE	By	Date	Qty	Approval Chief Eng / Prod Mgr	Approval QC Inspector

Part No: _____ PAR #: _____ Fault Category: _____ NCR: Yes No DQA: _____ Date: _____

Resolution: _____ Disposition: _____ QA: N/C Closed: _____ Date: _____

NCR:		WORK ORDER NON-CONFORMANCE (NCR)						
DATE	STEP	Description of NC Section A	Corrective Action Section B			Verification Section C	Approval Chief Eng	Approval QC Inspector
			Initial Chief Eng	Action Description Chief Eng	Sign & Date			

NOTE: Date & initial all entries

H:\fFORMS\Quality Assurance\approved QA\NCRWO RevE

Work Order ID 70177

Monday, May 30, 2011 2:40:24 PM

Item ID: D3391-021 **Accept** **Setup** **Start**

Revision ID: **Stop**

Item Name: Fwd Tube Assembly

Start Date: 5/31/2011 **Start Qty:** 1.00 **Cust Item ID:**

Required Date: 6/10/2011 **Req'd Qty:** 1.00 **Customer:**

Reference:

Approvals: **Process Plan:** _____ **Date:** _____ **Tooling:** _____ **Date:** _____ **Run** **Start**

QC: _____ **Date:** _____ **SPC (Y/N):** _____ **Date:** _____ **Stop**

Sequence ID/ Work Center ID	Operation Description	Set Up/ Run Hours	Tool ID	Tool #	Plan Code	Accept Qty	Reject Qty	Reject Number	Insp. Stamp
200	Chemical Conversion Coat per QSI005 4.1	0.00				1	0		11/06/15
HandFinish	**Memo**	0.00							
Hand Finishing									
210	QC3- Inspect Part Finish	0.00						11-6-15	
QC	**Memo**	0.00							
Quality Control									
220		0.00							
Skidtubes	Skidtubes								
	Memo	0.00							
Skidtubes	1-instal spacers as per dwg D3391 A/R Magnabond 6398 batch: M116677 3 DL 11/06/15 exp. date: 11/68 cure time 12hrs. as per QSI015 2- grind crossbolt flush 3 DL 11/06/15 3-back drill crossbolt if necessary								

Dart Aerospace Ltd

W/O:		WORK ORDER CHANGES					
DATE	STEP	PROCEDURE CHANGE	By	Date	Qty	Approval Chief Eng / Prod Mgr	Approval QC Inspector

Part No: _____ PAR #: _____ Fault Category: _____ NCR: Yes No DQA: _____ Date: _____

Resolution: _____ Disposition: _____ QA: N/C Closed: _____ Date: _____

NCR:		WORK ORDER NON-CONFORMANCE (NCR)						
DATE	STEP	Description of NC Section A	Corrective Action Section B			Verification Section C	Approval Chief Eng	Approval QC Inspector
			Initial Chief Eng	Action Description Chief Eng	Sign & Date			

NOTE: Date & initial all entries

H:\fFORMS\Quality Assurance\approved QA\NCRWO RevE

Work Order ID 70177

Monday, May 30, 2011 2:40:24 PM

Item ID: D3391-021 **Accept** **Setup** **Start** **Stop**

Revision ID:

Item Name: Fwd Tube Assembly

Start Date: 5/31/2011 **Start Qty:** 1.00 **Cust Item ID:**

Required Date: 6/10/2011 **Req'd Qty:** 1.00 **Customer:**

Reference:

Approvals: **Process Plan:** _____ **Date:** _____ **Tooling:** _____ **Date:** _____ **Run** **Start** **Stop**

QC: _____ **Date:** _____ **SPC (Y/N):** _____ **Date:** _____

Sequence ID/ Work Center ID	Operation Description	Set Up/ Run Hours	Tool ID	Tool #	Plan Code	Accept Qty	Reject Qty	Reject Number	Insp. Stamp
230	QC5- Inspect part completeness to step on W/O	0.00							
QC	**Memo**	0.00 S u 06/20							
Quality Control									
235	Pressure Wash per QSI005 4.3	0.00							
HandFinish	**Memo**	0.00				1	0	M 11/06/20	
Hand Finishing	AND REALODINE AS PER PAR09-043 M 116964								
240	White Gloss(Ref:4.3.5.1) per QSI005 4.3-Alum	0.00							
Powdercoat	**Memo**	0.00				1		BR 11-6-20.	
Powder Coating	START TIME: 2:35 OVEN TEMPERATURE: 400° FINISH TIME: 3:05.								

Dart Aerospace Ltd

W/O:		WORK ORDER CHANGES					
DATE	STEP	PROCEDURE CHANGE	By	Date	Qty	Approval Chief Eng / Prod Mgr	Approval QC Inspector

Part No: _____ **PAR #:** _____ **Fault Category:** _____ **NCR:** Yes No **DQA:** _____ **Date:** _____

Resolution: _____ **Disposition:** _____ **QA: N/C Closed:** _____ **Date:** _____

NCR:		WORK ORDER NON-CONFORMANCE (NCR)						
DATE	STEP	Description of NC Section A	Corrective Action Section B			Verification Section C	Approval Chief Eng	Approval QC Inspector
			Initial Chief Eng	Action Description Chief Eng	Sign & Date			

NOTE: Date & initial all entries

Work Order ID 70177

Monday, May 30, 2011 2:40:24 PM

Item ID: D3391-021 **Accept** **Setup Start**

Revision ID:

Item Name: Fwd Tube Assembly **Stop**

Start Date: 5/31/2011 **Start Qty:** 1.00 **Cust Item ID:**

Required Date: 6/10/2011 **Req'd Qty:** 1.00 **Customer:**

Reference:

Approvals: **Process Plan:** _____ **Date:** _____ **Tooling:** _____ **Date:** _____ **Run Start**

QC: _____ **Date:** _____ **SPC (Y/N):** _____ **Date:** _____ **Stop**

Sequence ID/ Work Center ID	Operation Description	Set Up/ Run Hours	Tool ID	Tool #	Plan Code	Accept Qty	Reject Qty	Reject Number	Insp. Stamp
250	QC3- Inspect Part Finish	0.00							
QC	**Memo**	0.00				1	ϕ	11	11/06/21
Quality Control									
255		0.00							
Skidtubes	Skidtubes								
Skidtubes	**Memo**	0.00				1	ϕ	11	11/06/21
	**** install D3591-1 spacer as per DSI9364 and wearplate and gasket as per DWG ****								
257	QC5- Inspect part completeness to step on W/O	0.00							
QC	**Memo**	0.00							
Quality Control									

11/06/21

Dart Aerospace Ltd

W/O:		WORK ORDER CHANGES					
DATE	STEP	PROCEDURE CHANGE	By	Date	Qty	Approval Chief Eng / Prod Mgr	Approval QC Inspector

Part No: _____ **PAR #:** _____ **Fault Category:** _____ **NCR:** Yes No **DQA:** _____ **Date:** _____

Resolution: _____ **Disposition:** _____ **QA: N/C Closed:** _____ **Date:** _____

NCR:		WORK ORDER NON-CONFORMANCE (NCR)						
DATE	STEP	Description of NC Section A	Corrective Action Section B			Verification Section C	Approval Chief Eng	Approval QC Inspector
			Initial Chief Eng	Action Description Chief Eng	Sign & Date			

NOTE: Date & initial all entries

Work Order ID 70177

Monday, May 30, 2011 2:40:24 PM

Item ID: D3391-021 **Accept** **Setup Start** **Stop**

Revision ID:

Item Name: Fwd Tube Assembly

Start Date: 5/31/2011 **Start Qty:** 1.00 **Cust Item ID:**

Required Date: 6/10/2011 **Req'd Qty:** 1.00 **Customer:**

Reference:

Run Start **Stop**

Approvals: **Process Plan:** _____ **Date:** _____ **Tooling:** _____ **Date:** _____

QC: _____ **Date:** _____ **SPC (Y/N):** _____ **Date:** _____

Sequence ID/ Work Center ID	Operation Description	Set Up/ Run Hours	Tool ID	Tool #	Plan Code	Accept Qty	Reject Qty	Reject Number	Insp. Stamp
260	Identify as per dwg & Stock Location: w/o	0.00	D412-742-043/	B70179		1	ø		11/06/22
Packaging	Memo	0.00							
Packaging									
280	QC21- Final Inspection - Work Order Release	0.00						11/6/22	
QC	Memo	0.00							
Quality Control									

MF 11-06-22

.Dart Aerospace Ltd

W/O:		WORK ORDER CHANGES					
DATE	STEP	PROCEDURE CHANGE	By	Date	Qty	Approval Chief Eng / Prod Mgr	Approval QC Inspector

Part No: _____ **PAR #:** _____ **Fault Category:** _____ **NCR:** Yes No **DQA:** _____ **Date:** _____

Resolution: _____ **Disposition:** _____ **QA: N/C Closed:** _____ **Date:** _____

NCR:		WORK ORDER NON-CONFORMANCE (NCR)						
DATE	STEP	Description of NC Section A	Corrective Action Section B			Verification Section C	Approval Chief Eng	Approval QC Inspector
			Initial Chief Eng	Action Description Chief Eng	Sign & Date			

NOTE: Date & initial all entries

Picklist Print

Monday, May 30, 2011 2:40:18 PM

3

Work Order ID: 70177

Parent Item: D3391-021

Parent Item Name: Fwd Tube Assembly

Start Date: 5/31/2011 **Required Date:** 6/10/2011

Start Qty: 1.00 **Required Qty:** 1.00

Comments:

IPP A□05.09.13□New issue□ KJ/JLM□
IPP B□06.02.10□Dwg rev.D ecn 773 □EC□
IPP C□06.05.02□Added inspections □EC□
IPP D 07.03.13 rev F dwg EC
IPP E 07.11.07 revG dwg ecn1053P EC verified by: DD
IPP Rev:f ECN 1056 07-11-12 DD verified by: EC
IPP Rev:G 08-09-08 new process (ecn 08-510) DD verified by:EC
IPP Rev:H 08-09-10 revH as per dwg DD verified by:EC
IPP Rev J 09.02.02 added hardware EC verifified by: DD

Component Item ID/ Item Name	Replacement Item ID	Mfg/ Purch	Bin Item	Primary Location	Last Location	Route Seq ID	Unit of Measure	Qty on Hand	Qty per Kit	Total Qty	Qty Issued	Date Issued	Status
D6013-047		Manufactured	No			100	Each	23.0000	1	1			
Skidtube Material													
				Location		**Loc Qty**		**Loc Code**					
				LG		23							
					26547	23				1		11/06/01	
D3670-4-200		Manufactured	No			220	Each	59.0000	4	4			
SPACER													
				Location		**Loc Qty**		**Loc Code**					
				LG		59							
					68950	59				4		11/06/15	
D3401-041		Manufactured	No			255	Each	10.0000	1	1			
Tow Cap Assembly										11/06/21			
				Location		**Loc Qty**		**Loc Code**					
				FP007		10							
					~~61505~~	10				11			

Dart Aerospace Ltd

W/O:		WORK ORDER CHANGES					
DATE	STEP	PROCEDURE CHANGE	By	Date	Qty	Approval Chief Eng / Prod Mgr	Approval QC Inspector

Part No: _____ **PAR #:** _____ **Fault Category:** _____ **NCR:** Yes No **DQA:** _____ **Date:** _____

Resolution: _____ **Disposition:** _____ **QA: N/C Closed:** _____ **Date:** _____

NCR:		WORK ORDER NON-CONFORMANCE (NCR)						
DATE	STEP	Description of NC Section A	Corrective Action Section B			Verification Section C	Approval Chief Eng	Approval QC Inspector
			Initial Chief Eng	Action Description Chief Eng	Sign & Date			

NOTE: Date & initial all entries

Picklist Print

Monday, May 30, 2011 2:40:18 PM

Work Order ID: 70177

Parent Item: D3391-021

Parent Item Name: Fwd Tube Assembly

Start Date: 5/31/2011 **Required Date:** 6/10/2011

Start Qty: 1.00 **Required Qty:** 1.00

D3564-13		Manufactured	No	255	Each	30.0000	1	1	
Wearshoe									M 11/06/21

Location	Loc Qty	Loc Code	
FP016	18		
69280	18		
FP017	12		
66805	12		X1

D3566-13		Manufactured	No	255	Each	44.0000	1	1	
Gasket									M 11/06/21

Location	Loc Qty	Loc Code	
FP	26		
69281	26		
FP014	18		
68341	18		X1

AN960C10L	NAS1149C0332 R	Purchased	No	255	Each	0.0000	10	10	
washer					M117887				(X10) M 11/06/21
AN3C4A		Purchased	No	255	Each	2,337.000	10	10	
BOLT									M 11/06/21

Location	Loc Qty	Loc Code	
ST350	2337		
117094	955		X10
117313	82		
117688	800		
117795	500		

Dart Aerospace Ltd

W/O:		WORK ORDER CHANGES					
DATE	STEP	PROCEDURE CHANGE	By	Date	Qty	Approval Chief Eng / Prod Mgr	Approval QC Inspector

Part No: _____ PAR #: _____ Fault Category: _____ NCR: Yes No DQA: _____ Date: _____

Resolution: _____ Disposition: _____ QA: N/C Closed: _____ Date: _____

NCR:		WORK ORDER NON-CONFORMANCE (NCR)						
DATE	STEP	Description of NC Section A	Corrective Action Section B			Verification Section C	Approval Chief Eng	Approval QC Inspector
			Initial Chief Eng	Action Description Chief Eng	Sign & Date			

NOTE: Date & initial all entries

H:\fFORMS\Quality Assurance\approved QA\NCRWO RevE

Picklist Print

Monday, May 30, 2011 2:40:19 PM

Work Order ID: 70177

Parent Item: D3391-021

Parent Item Name: Fwd Tube Assembly

Start Date: 5/31/2011 **Required Date:** 6/10/2011

Start Qty: 1.00 **Required Qty:** 1.00

D3672-1 Phenolic Washer	Manufactured	No	255	Each	1,204.000	4	4	M 11 0 6/2

Location	Loc Qty	Loc Code
ST074	1204	
64177	704	
66821	500	

AELS-1032-130 INSERT	Purchased	No	255	Each	0.0000	2	2	M 117717 (x2) M 11 0 6/2
AELS-1032-225 INSERT	Purchased	No	255	Each	0.0000	10	10	M 117717 (x10) M 11 0 6/2

Dart Aerospace Ltd

W/O:		WORK ORDER CHANGES					
DATE	STEP	PROCEDURE CHANGE	By	Date	Qty	Approval Chief Eng / Prod Mgr	Approval QC Inspector

Part No: _____ **PAR #:** _____ **Fault Category:** _____ **NCR:** Yes No **DQA:** _____ **Date:** _____

Resolution: _____ **Disposition:** _____ **QA: N/C Closed:** _____ **Date:** _____

NCR:		WORK ORDER NON-CONFORMANCE (NCR)						
DATE	STEP	Description of NC Section A	Corrective Action Section B			Verification Section C	Approval Chief Eng	Approval QC Inspector
			Initial Chief Eng	Action Description Chief Eng	Sign & Date			

NOTE: Date & initial all entries

H:\fFORMS\Quality Assurance\approved QA\NCRWO RevE

DART AEROSPACE LTD	Work Order:	70177
Description: Float Skidtube (412)	Part Number:	D3391-1
Inspection Dwg: D3391 Rev: H		Page 1 of 1

FIRST ARTICLE INSPECTION CHECKLIST

[X] First Article [ ] Prototype

Drawing Dimension	Tolerance	Actual Dimension	Accept	Reject	Method of Inspection	Comments
0.687	+0.010/-0.000	.688	—		Vern ML-7	
3.590	+0.025/-0.010	3.606	—		"	
3.300	+0.040/-0.000	3.312	—		"	
1.429	+0.040/-0.060	1.440	—		"	
4.250	+/-0.010	4.245	—		"	
4.250	+/-0.010	4.250	—		"	
.500	±.010	.508	—		RA 26	Vern
Ø .1875	+.004 -.001	.187	—		"	

Measured by:		Audited by:		Prototype Approval:	N/A
Date:	11/06/08 11/06/10	Date:	11/06/13	Date:	N/A

Rev	Date	Change	Revised by	Approved
A	06.04.27	New Issue P/O D3391-011/-021	KJ/JLM	
B	06.06.19	Tolerances revised per D3391 Rev. E	KJ/JLM	
C	07.03.21	Dimensions removed per Dwg rev. F	KJ/JLM	
D	07.11.23	Dwg Rev. updated	KJ/EC/DD	
E	09.12.14	Dwg Rev updated	KJ	

70177

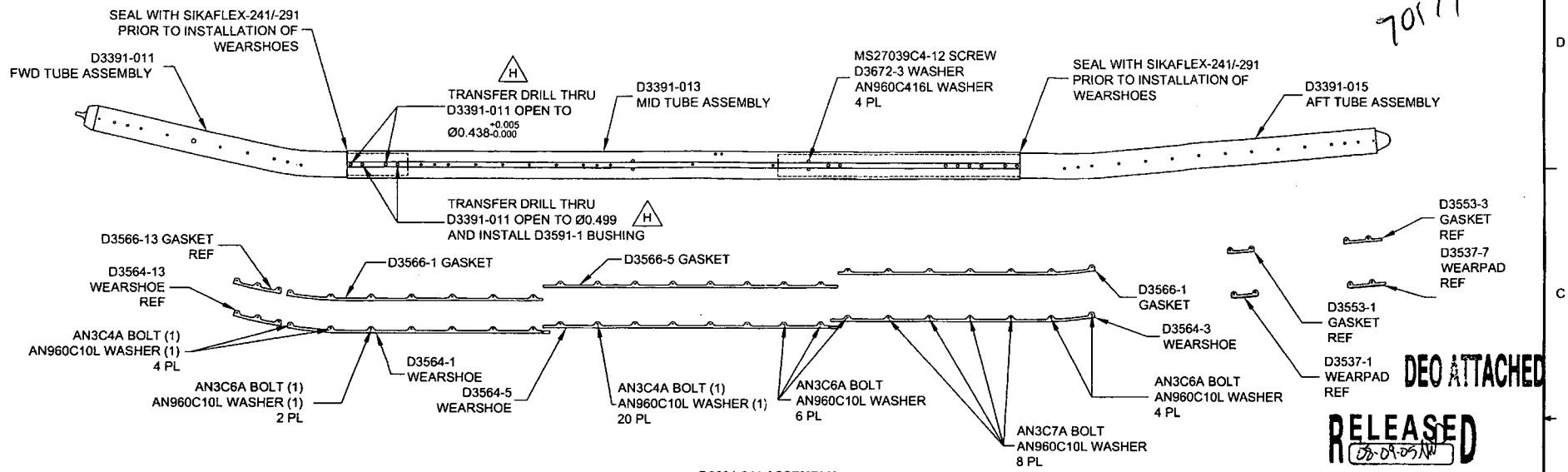

DEO ATTACHED

RELEASED 08-09-05

D3391-041 ASSEMBLY

REV.	DESCRIPTION	BY	DATE
H	DRAWING UPDATED TO CURRENT STANDARDS. SHT 1 PL ADDED D3591-1 BUSHING. ZN C6 Ø0.438 DIM WAS 4 PL. ADDED Ø0.499 DIM AND D3591-1 BUSHING. SHT 2 PL ADDED D3591-1 BUSHING. ZN C6 Ø0.438 DIM WAS 4 PL. ADDED Ø0.499 DIM AND D3591-1 BUSHING. (FOR FURTHER INFO SEE DSI 9364 & NCR 08-074)	AJS	08.08.20
G	REPLACE NAS INSERTS W/ AELS INSERTS SWITCH TO D3670-XXXX SPACERS FOR INSTALLING FLOAT BAGS, DWG REORGANIZED FOR CLARITY	DC	07.07.31
F	ADD SS WEARSHOE, GASKET REMOVE FWD SADDLE HOLE -011/-021	PH	07.01.18
E	CHANGE TOLERANCE, EASE MANUFACTURE	PH	06.04.25
D	UPDATE TOLERANCE, CHANGE HOLE SIZE	PH	06.01.23
C	LENGTHEN AFT EXTENSION	PH	05.09.27
B	DRAWING UPDATES	PH	05.06.10
A	NEW ISSUE	PH	05.02.07

D3391-041 FLOAT SKIDTUBE ASSEMBLY PARTS LIST

QTY -041	PART NUMBER	DESCRIPTION
X	D3391-041	FLOAT SKIDTUBE ASSEMBLY
1	D3391-011	FWD TUBE ASSEMBLY
1	D3391-013	MID TUBE ASSEMBLY
1	D3391-015	AFT TUBE ASSEMBLY
1	D3564-1	WEARSHOE
1	D3564-3	WEARSHOE
1	D3564-5	WEARSHOE
2	D3566-1	GASKET
1	D3566-5	GASKET
H 2	D3591-1	BUSHING
4	D3672-3	WASHER
24	AN3C4A	BOLT
12	AN3C6A	BOLT
8	AN3C7A	BOLT
44	AN960C10L	WASHER
4	MS27039C4-12	SCREW
4	AN960C416L	WASHER

GENERAL NOTES

1) FINISH: CHEMICAL CONVERSION COAT PER DART QSI 005 4.1
POWDER COAT WHITE (4.3.5.1) PER DART QSI 005 4.3
2) SPRAY INSIDE OF TUBE WITH A COAT OF LPS LABORATORIES "LPS-3" AFTER FINISH AND AFTER INSTALLATION OF INSERTS. COAT ALL EXPOSED FASTENERS WITH LPS LABORATORIES "LPS PROCYON" AFTER FINAL ASSEMBLY, CLEAN EXCESS OFF POWDER COATING WITH MEK DEGREASER.
3) TOLERANCES: PER DART QSI 018 UNLESS OTHERWISE NOTED
4) UNITS: INCHES UNLESS OTHERWISE NOTED
5) USE DART DRILL TEMPLATE DT8217 TO LOCATE AND DRILL Ø0.297 SIZE HOLES FOR WEARSHOE INSERTS. C'BORE AS NOTED AND INSTALL INSERTS EXCEPT WHERE INDICATED.

DESIGN	PH	DART AEROSPACE USA, INC PORT HADLOCK, WA
DRAWN	AJS	
CHECKED		DRAWING NO. D3391 — REV. H — SHEET 1 OF 8
MFG. APPR.		
APPROVED		TITLE: 412 FLOAT SKIDTUBE — SCALE: NTS
DE APPR.		
DATE	08.08.20	

Dart Aerospace Ltd

W/O:		WORK ORDER CHANGES					
DATE	STEP	PROCEDURE CHANGE	By	Date	Qty	Approval Chief Eng / Prod Mgr	Approval QC Inspector

Part No: _____ **PAR #:** _____ **Fault Category:** _____ **NCR:** Yes No **DQA:** _____ **Date:** _____

Resolution: _____ **Disposition:** _____ **QA: N/C Closed:** _____ **Date:** _____

NCR:		WORK ORDER NON-CONFORMANCE (NCR)						
DATE	STEP	Description of NC Section A	Corrective Action Section B			Verification Section C	Approval Chief Eng	Approval QC Inspector
			Initial Chief Eng	Action Description Chief Eng	Sign & Date			

NOTE: Date & initial all entries

H:\fFORMS\Quality Assurance\approved QA\NCRWO RevE

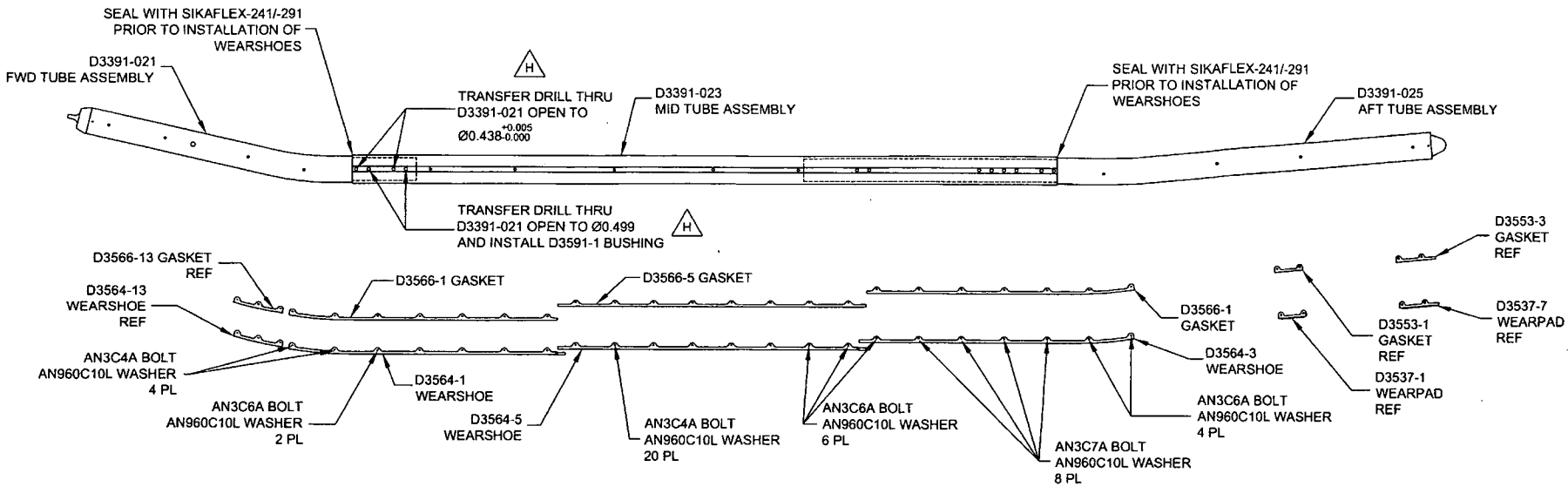

D3391-043 ASSEMBLY

D3391-043 FLOAT SKIDTUBE ASSEMBLY PARTS LIST

QTY -043	PART NUMBER	DESCRIPTION
X	D3391-043	FLOAT SKIDTUBE ASSEMBLY
1	D3391-021	FWD TUBE ASSEMBLY
1	D3391-023	MID TUBE ASSEMBLY
1	D3391-025	AFT TUBE ASSEMBLY
1	D3564-1	WEARSHOE
1	D3564-3	WEARSHOE
1	D3564-5	WEARSHOE
2	D3566-1	GASKET
1	D3566-5	GASKET
2	D3591-1	BUSHING
24	AN3C4A	BOLT
12	AN3C6A	BOLT
8	AN3C7A	BOLT
44	AN960C10L	WASHER

H

GENERAL NOTES

1) FINISH: CHEMICAL CONVERSION COAT PER DART QSI 005 4.1
POWDER COAT WHITE (4.3.5.1) PER DART QSI 005 4.3
2) SPRAY INSIDE OF TUBE WITH A COAT OF LPS LABORATORIES "LPS-3" AFTER FINISH AND AFTER INSTALLATION OF INSERTS. COAT ALL EXPOSED FASTENERS WITH LPS LABORATORIES "LPS PROCYON" AFTER FINAL ASSEMBLY, CLEAN EXCESS OFF POWDER COATING WITH MEK DEGREASER.
3) TOLERANCES: PER DART QSI 018 UNLESS OTHERWISE NOTED
4) UNITS: INCHES UNLESS OTHERWISE NOTED
5) USE DART DRILL TEMPLATE DT8217 TO LOCATE AND DRILL Ø0.297 SIZE HOLES FOR WEARSHOE INSERTS. C'BORE AS NOTED AND INSTALL INSERTS EXCEPT WHERE INDICATED.

DEO ATTACHED

RELEASED 08.09.05

DESIGN	PH	DART AEROSPACE USA, INC PORT HADLOCK, WA
DRAWN	AJS	
CHECKED		DRAWING NO. REV. H
MFG. APPR.		D3391 SHEET 2 OF 8
APPROVED		TITLE SCALE
DE APPR.		412 FLOAT SKIDTUBE NTS
DATE	08.08.20	

Dart Aerospace Ltd

W/O:		WORK ORDER CHANGES					
DATE	STEP	PROCEDURE CHANGE	By	Date	Qty	Approval Chief Eng / Prod Mgr	Approval QC Inspector

Part No: _____ **PAR #:** _____ **Fault Category:** _____ **NCR:** Yes No **DQA:** _____ **Date:** _____

Resolution: _____ **Disposition:** _____ **QA: N/C Closed:** _____ **Date:** _____

NCR:		WORK ORDER NON-CONFORMANCE (NCR)						
DATE	STEP	Description of NC Section A	Corrective Action Section B			Verification Section C	Approval Chief Eng	Approval QC Inspector
			Initial Chief Eng	Action Description Chief Eng	Sign & Date			

NOTE: Date & initial all entries

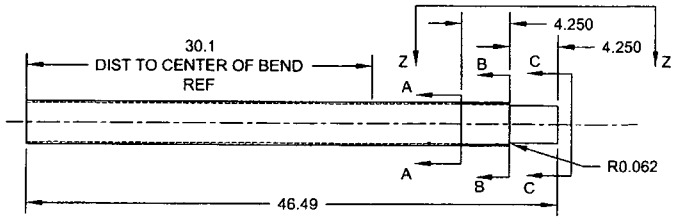

D3391-1 CUTTING DETAIL
(MAKE FROM D6013-047 SKIDTUBE MATERIAL)

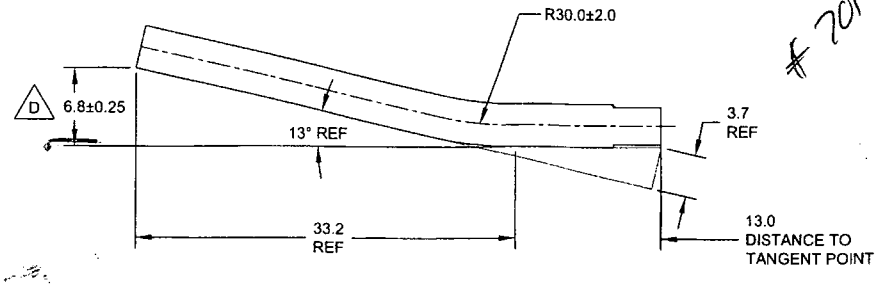

D3391-011/-021 BENDING DETAIL
(MAKE FROM D3391-1)

#70177

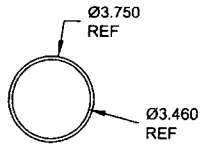

SECTION A-A
SCALE 2X

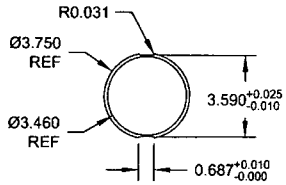

SECTION B-B
SCALE 2X

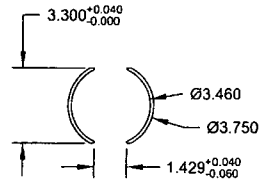

SECTION C-C
SCALE 2X

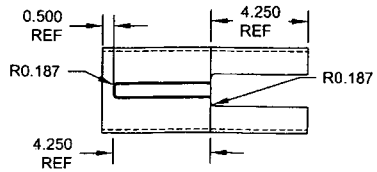

VIEW Z-Z
SCALE 2X

DEO ATTACHED

RELEASED
08-09-05 NW

DESIGN	PH	**DART AEROSPACE USA, INC** PORT HADLOCK, WA
DRAWN	AJS	
CHECKED		DRAWING NO. D3391 — REV. H — SHEET 3 OF 8
MFG. APPR.		
APPROVED		TITLE: 412 FLOAT SKIDTUBE — SCALE: NTS
DE APPR.		
DATE	08.08.20	

Dart Aerospace Ltd

W/O:		WORK ORDER CHANGES					
DATE	STEP	PROCEDURE CHANGE	By	Date	Qty	Approval Chief Eng / Prod Mgr	Approval QC Inspector

Part No: _____ **PAR #:** _____ **Fault Category:** _____ **NCR:** Yes No **DQA:** _____ **Date:** _____

Resolution: _____ **Disposition:** _____ **QA: N/C Closed:** _____ **Date:** _____

NCR:		WORK ORDER NON-CONFORMANCE (NCR)						
DATE	STEP	Description of NC Section A	Corrective Action Section B			Verification Section C	Approval Chief Eng	Approval QC Inspector
			Initial Chief Eng	Action Description Chief Eng	Sign & Date			

NOTE: Date & initial all entries

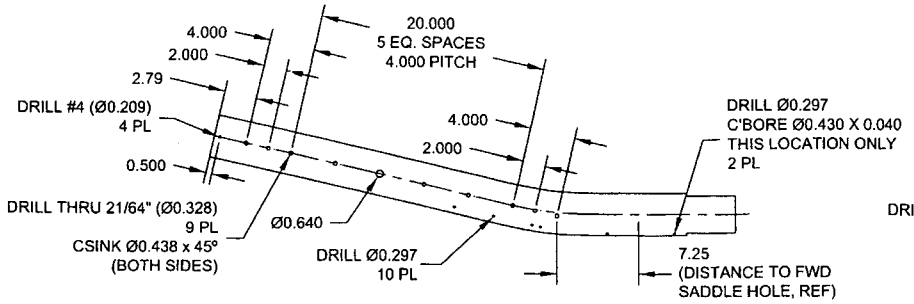

D3391-011 DRILLING DETAIL

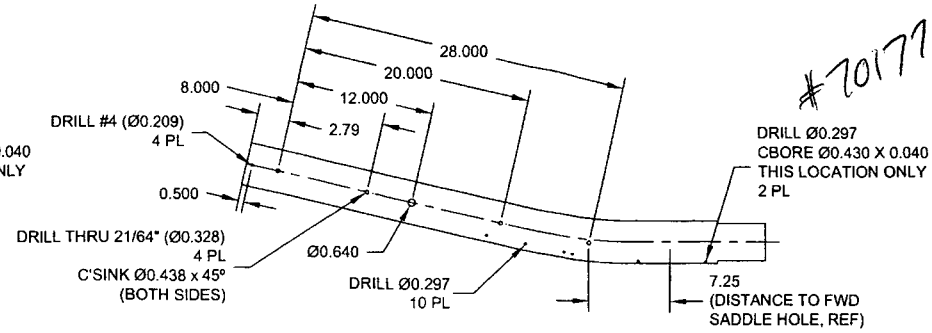

#70177

D3391-021 DRILLING DETAIL

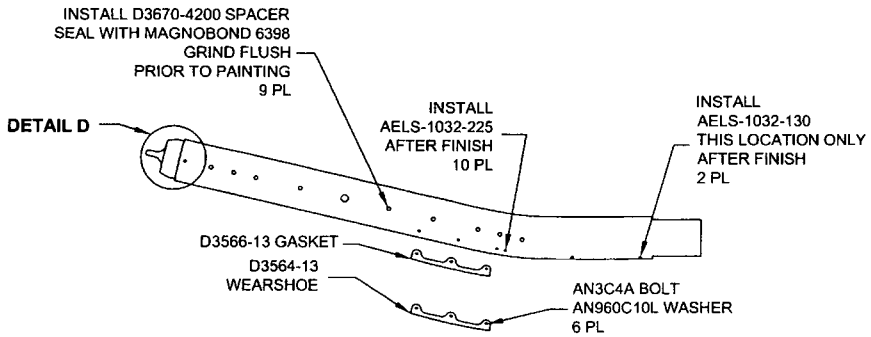

D3391-011 ASSEMBLY DETAIL

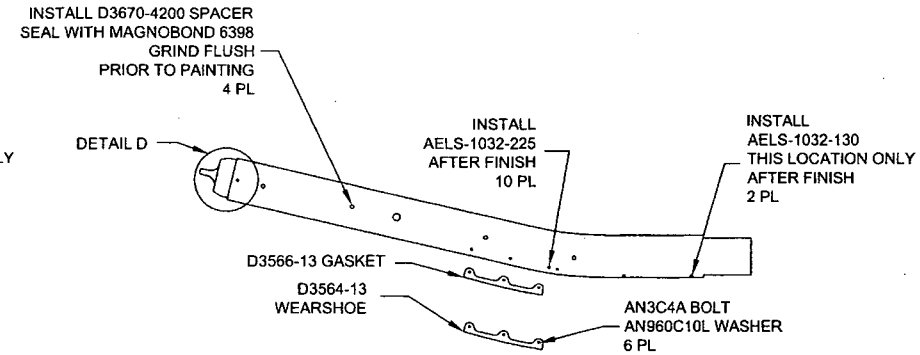

D3391-021 ASSEMBLY DETAIL

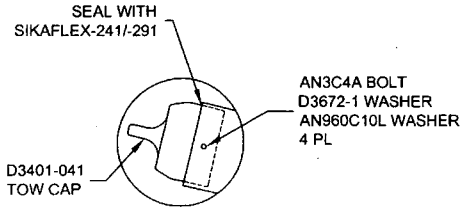

DETAIL D
SCALE 2X

D3391-011/-021 FWD TUBE ASSEMBLY PARTS LIST

QTY - 011	QTY - 021	PART NUMBER	DESCRIPTION
X		D3391-011	FWD TUBE ASSEMBLY
	X	D3391-021	FWD TUBE ASSEMBLY
1	1	D6013-047	FWD TUBE
1	1	D3401-041	TOW CAP
1	1	D3564-13	WEARSHOE
1	1	D3566-13	GASKET
9	4	D3670-4200	SPACER
4	4	D3672-1	WASHER
10	10	AN3C4A	BOLT
10	10	AN960C10L	WASHER
2	2	AELS-1032-130	INSERT
10	10	AELS-1032-225	INSERT

DEO ATTACHED

RELEASED 08-09-05 NW

DESIGN	PH	DART AEROSPACE USA, INC PORT HADLOCK, WA
DRAWN	AJS	
CHECKED		DRAWING NO. REV. H D3391 SHEET 4 OF 8
MFG. APPR.		
APPROVED		TITLE SCALE 412 FLOAT SKIDTUBE NTS
DE APPR.		
DATE	08.08.20	

Dart Aerospace Ltd

W/O:		WORK ORDER CHANGES					
DATE	STEP	PROCEDURE CHANGE	By	Date	Qty	Approval Chief Eng / Prod Mgr	Approval QC Inspector

Part No: _____ PAR #: _____ Fault Category: _____ NCR: Yes No DQA: _____ Date: _____

Resolution: _____ Disposition: _____ QA: N/C Closed: _____ Date: _____

NCR:		WORK ORDER NON-CONFORMANCE (NCR)						
DATE	STEP	Description of NC Section A	Corrective Action Section B			Verification Section C	Approval Chief Eng	Approval QC Inspector
			Initial Chief Eng	Action Description Chief Eng	Sign & Date			

NOTE: Date & initial all entries

H:\fFORMS\Quality Assurance\approved QA\NCRWO RevE

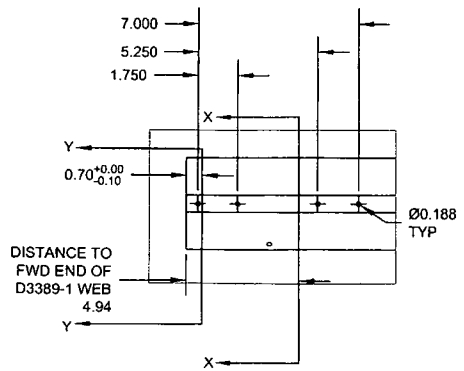

DETAIL J
SCALE 4X

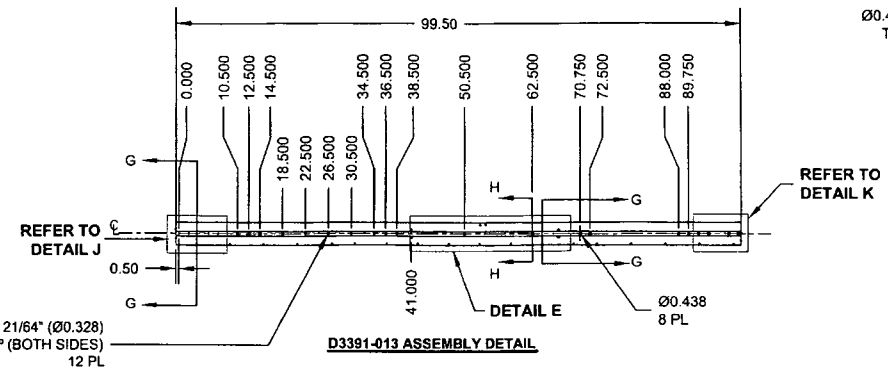

D3391-013 ASSEMBLY DETAIL

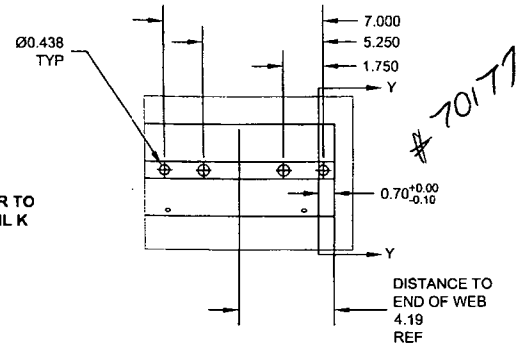

DETAIL K
SCALE 4X

#70177

SECTION G-G
SCALE 5X

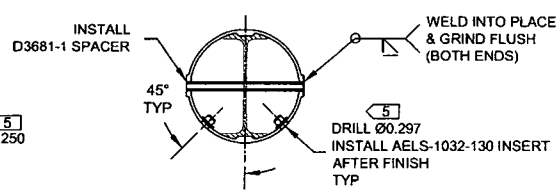

SECTION H-H 12 PL
SCALE 5X

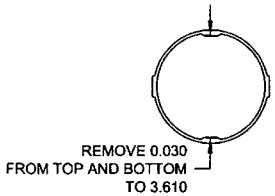

SECTION X-X
SCALE 5X

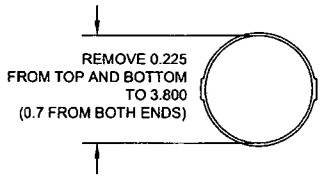

SECTION Y-Y
SCALE 5X

D3391-013 MID TUBE ASSEMBLY PARTS LIST

QTY -013	PART NUMBER	DESCRIPTION
X	D3391-013	MID TUBE ASSEMBLY
1	D2500-1-100	EXTRUSION
1	D3389-1	WEB
4	D3672-1	WASHER
4	D3672-3	WASHER
12	D3681-1	SPACER
24	AELS-1032-130	INSERT
4	ALS4-428-165	INSERT
4	AN960C10L	WASHER
4	AN960C416L	WASHER
4	MS27039C1-09	SCREW
4	MS27039C4-08	SCREW

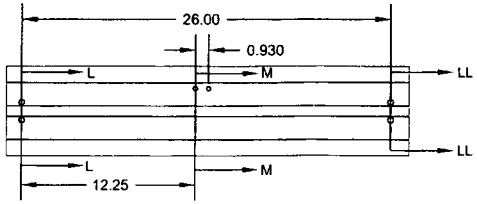

DETAIL E
SCALE NONE

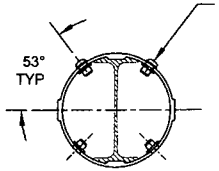

DRILL Ø0.297
INSTALL AELS-1032-130 INSERT
MS27039C1-09 SCREW
D3672-1 WASHER
AN960C10L WASHER
AFTER FINISH
4 PL

SECTION M-M
SCALE 5X

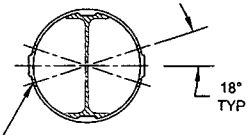

DRILL Ø0.250
4 PL

SECTION LL-LL
SCALE 5X

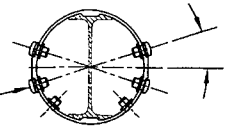

DRILL Ø0.391
INSTALL ALS4-428-165 INSERT
MS27039C4-08 SCREW
D3672-3 WASHER
AN960C416L WASHER
AFTER FINISH
4 PL

SECTION L-L
SCALE 5X

D3391-013 MID TUBE ASSEMBLY

1) MATERIAL: MAKE FROM D2500-1-100 EXTRUSION
2) INSTALL D3389-1 WEB TO OUTER TUBE USING SIKAFLEX-241/-291 PER QSI 015
3) WELDING: PER DART QSI 004

DEO ATTACHED

RELEASED 08.24.2020

DESIGN	PH	DART AEROSPACE USA, INC PORT HADLOCK, WA
DRAWN	AJS	
CHECKED		DRAWING NO. REV. H
MFG. APPR.		D3391 SHEET 5 OF 8
APPROVED		TITLE SCALE
DE APPR.		412 FLOAT SKIDTUBE NTS
DATE	08.08.20	

Dart Aerospace Ltd

W/O:		WORK ORDER CHANGES					
DATE	STEP	PROCEDURE CHANGE	By	Date	Qty	Approval Chief Eng / Prod Mgr	Approval QC Inspector

Part No: _____ **PAR #:** _____ **Fault Category:** _____ **NCR:** Yes No **DQA:** _____ **Date:** _____

Resolution: _____ **Disposition:** _____ **QA: N/C Closed:** _____ **Date:** _____

NCR:		WORK ORDER NON-CONFORMANCE (NCR)						
DATE	STEP	Description of NC Section A	Corrective Action Section B			Verification Section C	Approval Chief Eng	Approval QC Inspector
			Initial Chief Eng	Action Description Chief Eng	Sign & Date			

NOTE: Date & initial all entries

H:\fFORMS\Quality Assurance\approved QA\NCRWO RevE

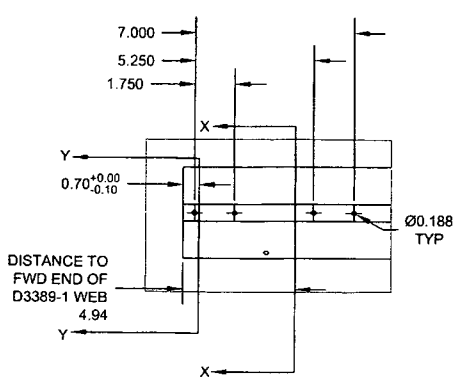

DETAIL J
SCALE 4X

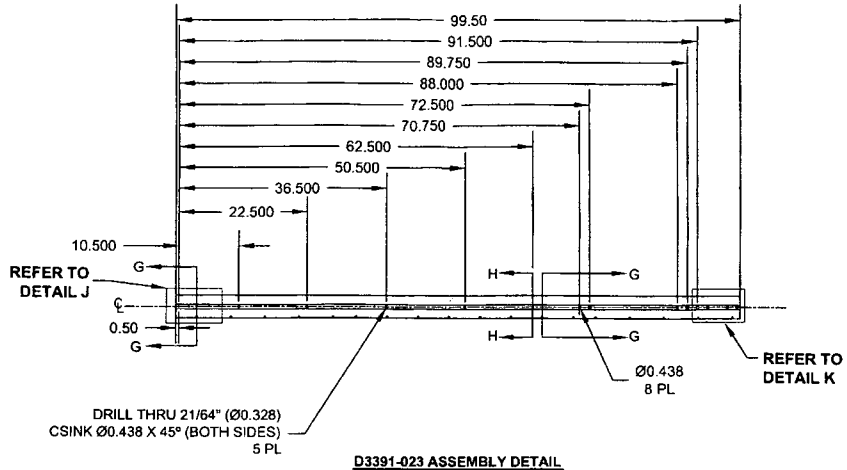

D3391-023 ASSEMBLY DETAIL

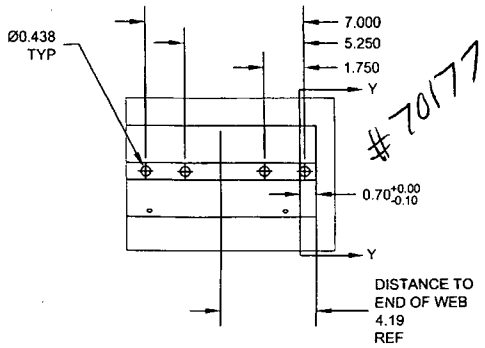

DETAIL K
SCALE 4X

#70177

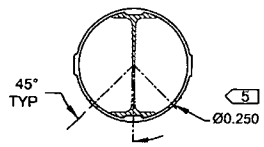

SECTION G-G
SCALE 5X

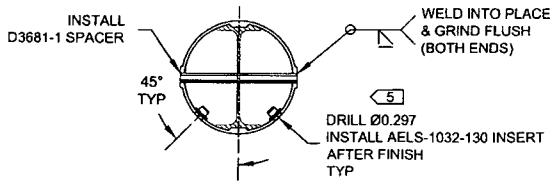

SECTION H-H 5 PL
SCALE 5X

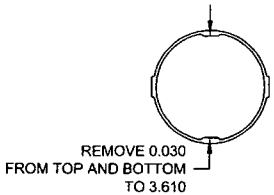

SECTION X-X
SCALE 5X

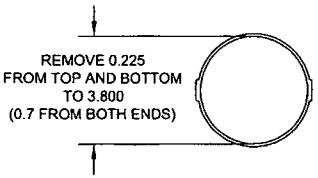

SECTION Y-Y
SCALE 5X

DEO ATTACHED

RELEASED 08-09-05 NW

D3391-023 MID TUBE ASSEMBLY PARTS LIST

QTY - 023	PART NUMBER	DESCRIPTION
X	D3391-023	MID TUBE ASSEMBLY
1	D2500-1-100	EXTRUSION
1	D3389-1	WEB
5	D3681-1	SPACER
20	AELS-1032-130	INSERT

D3391-023 MID TUBE ASSEMBLY

1) MATERIAL: MAKE FROM D2500-1-100 EXTRUSION
2) INSTALL D3389-1 WEB TO OUTER TUBE USING SIKAFLEX-241/-291 PER QSI 015
3) WELDING: PER DART QSI 004

DESIGN	PH	**DART AEROSPACE USA, INC** PORT HADLOCK, WA
DRAWN	AJS	
CHECKED		DRAWING NO. REV. H
MFG. APPR.		D3391 SHEET 6 OF 8
APPROVED		TITLE SCALE
DE APPR.		412 FLOAT SKIDTUBE NTS
DATE	08.08.20	

Dart Aerospace Ltd

W/O:		WORK ORDER CHANGES					
DATE	STEP	PROCEDURE CHANGE	By	Date	Qty	Approval Chief Eng / Prod Mgr	Approval QC Inspector

Part No: _____ **PAR #:** _____ **Fault Category:** _____ **NCR:** Yes No **DQA:** _____ **Date:** _____

Resolution: _____ **Disposition:** _____ **QA: N/C Closed:** _____ **Date:** _____

NCR:		WORK ORDER NON-CONFORMANCE (NCR)						
DATE	STEP	Description of NC Section A	Corrective Action Section B			Verification Section C	Approval Chief Eng	Approval QC Inspector
			Initial Chief Eng	Action Description Chief Eng	Sign & Date			

NOTE: Date & initial all entries

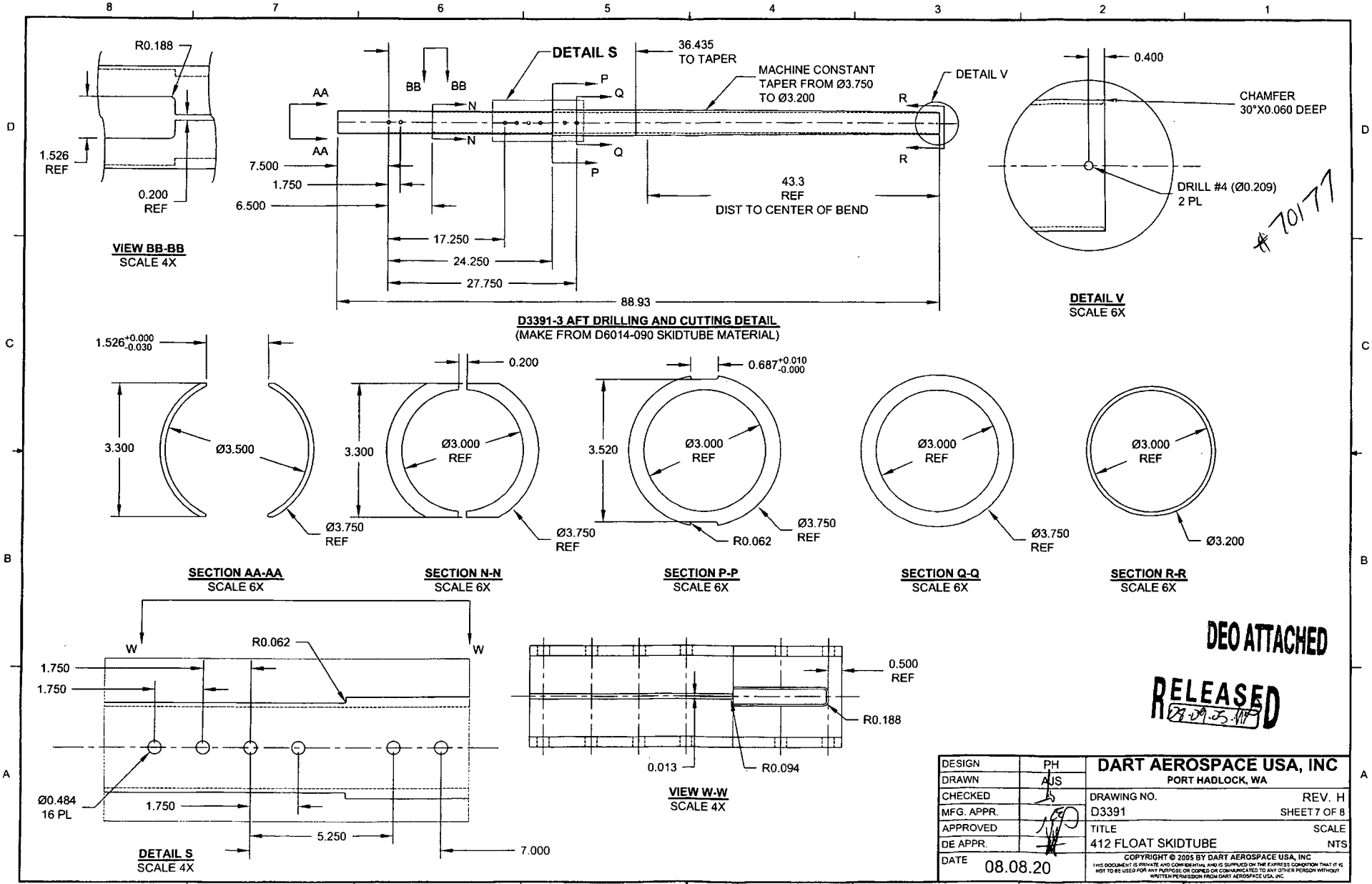
R0.188
1.526 REF
0.200 REF
VIEW BB-BB
SCALE 4X
AA
BB
N
P
Q
R
DETAIL S
36.435 TO TAPER
MACHINE CONSTANT TAPER FROM Ø3.750 TO Ø3.200
DETAIL V
7.500
1.750
6.500
17.250
24.250
27.750
88.93
43.3 REF DIST TO CENTER OF BEND
D3391-3 AFT DRILLING AND CUTTING DETAIL
(MAKE FROM D6014-090 SKIDTUBE MATERIAL)
0.400
CHAMFER 30°X0.060 DEEP
DRILL #4 (Ø0.209) 2 PL
DETAIL V
SCALE 6X
1.526 +0.000 -0.030
3.300
Ø3.500
Ø3.750 REF
SECTION AA-AA
SCALE 6X
0.200
Ø3.000 REF
SECTION N-N
SCALE 6X
0.687 +0.010 -0.000
3.520
R0.062
SECTION P-P
SCALE 6X
SECTION Q-Q
SCALE 6X
Ø3.200
SECTION R-R
SCALE 6X
W
R0.062
Ø0.484 16 PL
5.250
7.000
DETAIL S
SCALE 4X
0.500 REF
R0.188
0.013
R0.094
VIEW W-W
SCALE 4X
#70177
DEO ATTACHED
RELEASED
DESIGN PH
DRAWN AUS
CHECKED
MFG. APPR.
APPROVED
DE APPR.
DATE 08.08.20
DART AEROSPACE USA, INC
PORT HADLOCK, WA
DRAWING NO. D3391
REV. H
SHEET 7 OF 8
TITLE 412 FLOAT SKIDTUBE
SCALE NTS
COPYRIGHT © 2005 BY DART AEROSPACE USA, INC
THIS DOCUMENT IS PRIVATE AND CONFIDENTIAL AND IS SUPPLIED ON THE EXPRESS CONDITION THAT IT IS NOT TO BE USED FOR ANY PURPOSE OR COPIED OR COMMUNICATED TO ANY OTHER PERSON WITHOUT WRITTEN PERMISSION FROM DART AEROSPACE USA, INC.

Dart Aerospace Ltd

W/O:		WORK ORDER CHANGES					
DATE	STEP	PROCEDURE CHANGE	By	Date	Qty	Approval Chief Eng / Prod Mgr	Approval QC Inspector

Part No: _____ PAR #: _____ Fault Category: _____ NCR: Yes No DQA: _____ Date: _____

Resolution: _____ Disposition: _____ QA: N/C Closed: _____ Date: _____

NCR:		WORK ORDER NON-CONFORMANCE (NCR)						
DATE	STEP	Description of NC Section A	Corrective Action Section B			Verification Section C	Approval Chief Eng	Approval QC Inspector
			Initial Chief Eng	Action Description Chief Eng	Sign & Date			

NOTE: Date & initial all entries

#70177

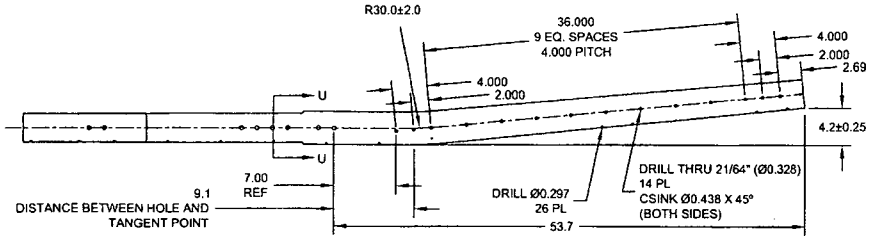

D3391-015 BENDING AND DRILLING DETAIL
(SEE CBORE DETAIL BELOW)

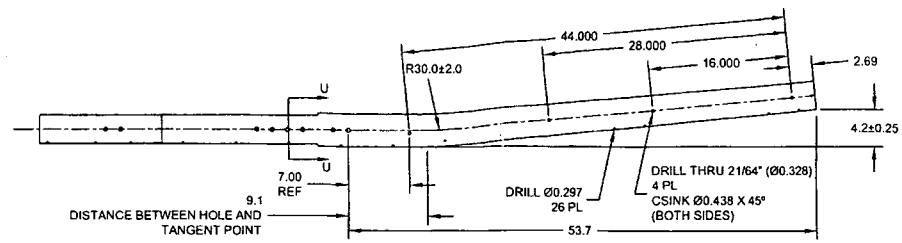

D3391-025 BENDING AND DRILLING DETAIL
(SEE CBORE DETAIL BELOW)

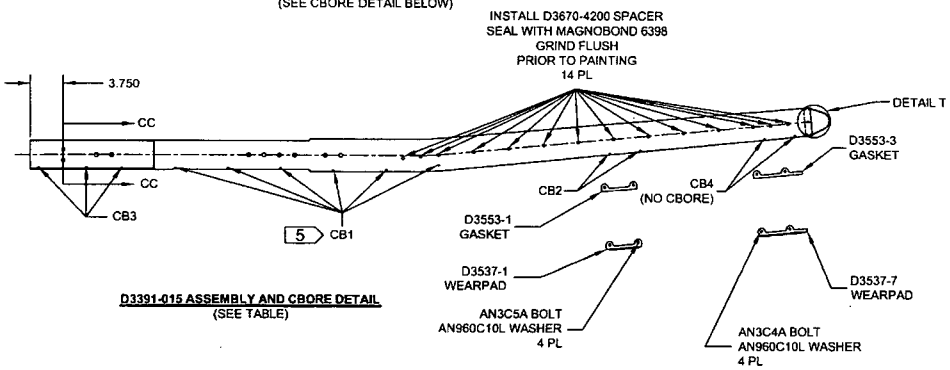

D3391-015 ASSEMBLY AND CBORE DETAIL
(SEE TABLE)

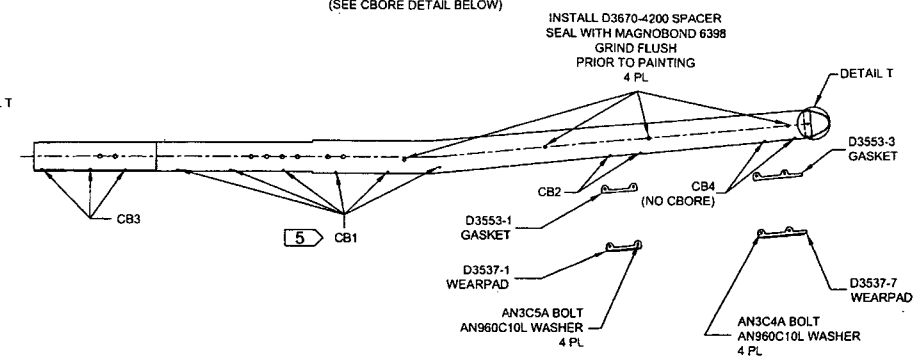

D3391-025 ASSEMBLY AND CBORE DETAIL
(SEE TABLE)

D3391-015/-025 AFT TUBE ASSEMBLY PARTS LIST

QTY - 015	QTY - 025	PART NUMBER	DESCRIPTION
X		D3391-015	AFT TUBE ASSEMBLY
	X	D3391-025	AFT TUBE ASSEMBLY
1	1	D6014-090	AFT TUBE
1	1	D2646	AFT CAP
1	1	D3537-1	WEARPAD
1	1	D3537-7	WEARPAD
1	1	D3553-1	GASKET
1	1	D3553-3	GASKET
14	4	D3670-4200	SPACER
2	2	D3672-1	WASHER
14	14	AELS-1032-130	INSERT
12	12	AELS-1032-225	INSERT
4		ALS4-428-165	INSERT
6	6	AN3C4A	BOLT
4	4	AN3C5A	BOLT
10	10	AN960C10L	WASHER

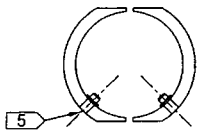

SECTION U-U
SCALE 3X

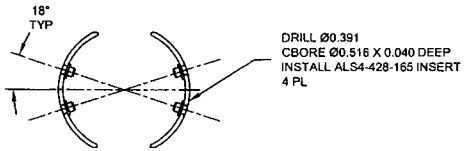

SECTION CC-CC
SCALE 3X

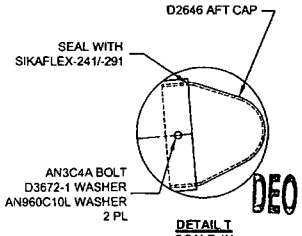

DETAIL T
SCALE 4X

DEO ATTACHED

RELEASED
08.09.05

C'BORE HOLES MARKED CB1-CB4 AS FOLLOWS AND
INSTALL AELS-1032-XXX AFTER FINISH AS NOTED

HOLES MARKED	QTY D3391-015	QTY D3391-025	CBORE	P/N
CB1	12	12	Ø0.430 X 0.170	AELS-1032-225
CB2	4	4	Ø0.430 X 0.170	AELS-1032-130
CB3	6	6	Ø0.430 X 0.040	AELS-1032-130
CB4	4	4	NONE	AELS-1032-130

DESIGN	PH	**DART AEROSPACE USA, INC** PORT HADLOCK, WA
DRAWN	AJS	
CHECKED		DRAWING NO. D3391 — REV. H — SHEET 8 OF 8
MFG. APPR.		
APPROVED		TITLE: 412 FLOAT SKIDTUBE — SCALE: NTS
DE APPR.		
DATE	08.08.20	

Dart Aerospace Ltd

W/O:		WORK ORDER CHANGES					
DATE	STEP	PROCEDURE CHANGE	By	Date	Qty	Approval Chief Eng / Prod Mgr	Approval QC Inspector

Part No: _____ PAR #: _____ Fault Category: _____ NCR: Yes No DQA: _____ Date: _____

Resolution: _____ Disposition: _____ QA: N/C Closed: _____ Date: _____

NCR:		WORK ORDER NON-CONFORMANCE (NCR)						
DATE	STEP	Description of NC Section A	Corrective Action Section B			Verification Section C	Approval Chief Eng	Approval QC Inspector
			Initial Chief Eng	Action Description Chief Eng	Sign & Date			

NOTE: Date & initial all entries

DRAWING NO.	TITLE	REV.	DART AEROSPACE USA, INC	D.E.O. NO.	SHEET NO.	SCALE
D3391	412 FLOAT SKIDTUBE	H	ENGINEERING ORDER	D3391-H-1	SHEET 1 OF 1	NTS

DRAWN	CHECKED	MFG. APPR.	APPROVED	DE APPR.
DATE 09.09.23	DATE 09.09.24	DATE 09/09/25	DATE 09/09/30	DATE 09/09/30

PURPOSE:
LPS-3 IS NO LONGER USED DURING ASSEMBLY OF D3391-041/-043 SKIDTUBES.

CHANGE:
AMEND NOTE 2 OF D3391-041/-043 SKIDTUBE ASSEMBLIES (ZN A6-1, A6-2) AS FOLLOWS:

2) ~~SPRAY INSIDE OF TUBE WITH A COAT OF LPS LABORATORIES "LPS-3" AFTER FINISH AND AFTER INSTALLATION OF INSERTS.~~ COAT ALL EXPOSED FASTENERS WITH LPS LABORATORIES "LPS PROCYON" AFTER FINAL ASSEMBLY, CLEAN EXCESS OFF POWDER COATING WITH MEK DEGREASER.

#70177

RELEASED
2010-02-02

Dart Aerospace Ltd

W/O:		WORK ORDER CHANGES					
DATE	STEP	PROCEDURE CHANGE	By	Date	Qty	Approval Chief Eng / Prod Mgr	Approval QC Inspector

Part No: _____ **PAR #:** _____ **Fault Category:** _____ **NCR:** Yes No **DQA:** _____ **Date:** _____

Resolution: _____ **Disposition:** _____ **QA: N/C Closed:** _____ **Date:** _____

NCR:		WORK ORDER NON-CONFORMANCE (NCR)						
DATE	STEP	Description of NC Section A	Corrective Action Section B			Verification Section C	Approval Chief Eng	Approval QC Inspector
			Initial Chief Eng	Action Description Chief Eng	Sign & Date			

NOTE: Date & initial all entries